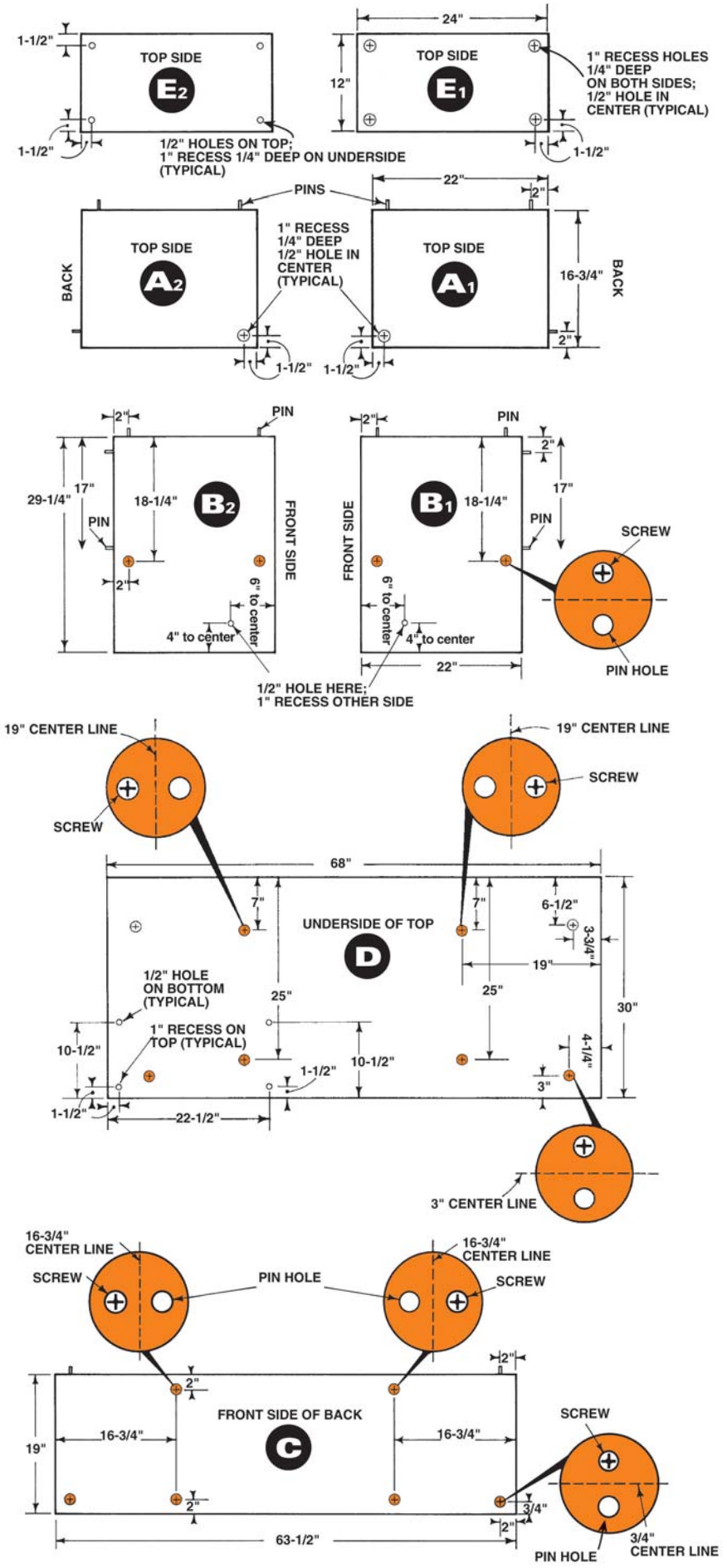Fig. B Fastener Location Guide